SET UP

733

NAME	733	RACE	DM 2010	DATE	10/11-09 2010

SPUR

1 ST			2ND		
☐	☑	☐	☑	☐	☐
61	60	59	54	55	56

PINION

1 ST			2ND		
☐	☑	☐	☐	☑	☐
16	17	18	21	22	23

DRIVE TRAIN

FRONT	REAR
GEAR DIFF	GEAR DIFF
☐ 150000 CST	☐ 40000 CST
☐ ONE WAY	
☐ SPOOL	☐ SOLID

SHOCK ABSORBERS

FRONT	REAR
OIL/CST 1000	OIL/CST 1000
SPRING pink	SPRING orange

ANTI-ROLL BARS

FRONT				REAR	
☐	☑	☐	☐	☐	☑
1.8	2.2	2.5	2.8	2.3	2.5

FRONT		TYRES	REAR	
LEFT	RIGHT		LEFT	RIGHT
Xceed	Xceed	MAKE	Xceed	Xceed
32 °	32 °	SHORE	40 °	40 °
59 mm	59 mm	DIAMETER	61 mm	61 mm
		5-MIN WEAR		

ENGINE	Mega ZX12 DS4		
TYPE	EDO	HEADSHIMS	0.3 mm
GLOWPLUG	Xceed 6	CARB DIA'	5.5 mm

EXHAUST	Capricorn		
FIXED HEADER	☐ ☐ ☐	CONICAL	☑ ☐
	LONG MED SHORT		YES NO

FUEL	Xceed	NITRO 16 %

BODY

BODY-TYPE	Xceed Kruzer
POSITION	WING +8mm

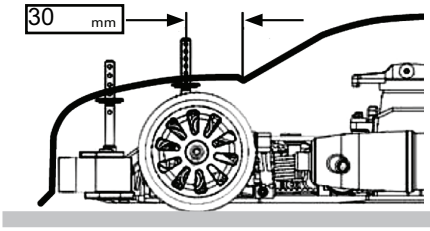

REMARKS

DLS system
front diff with 2 gears
rear anti-roll bar grinded to 1mm between the collars

TRACK Leipzig

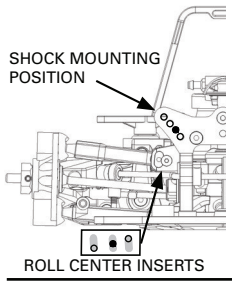

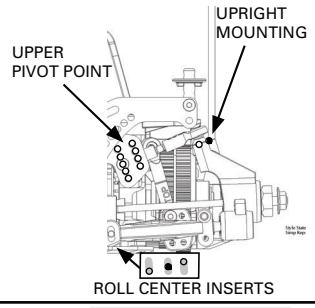

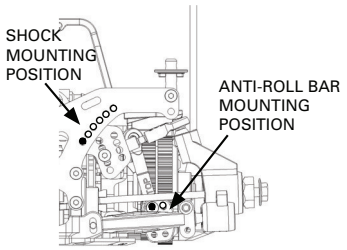

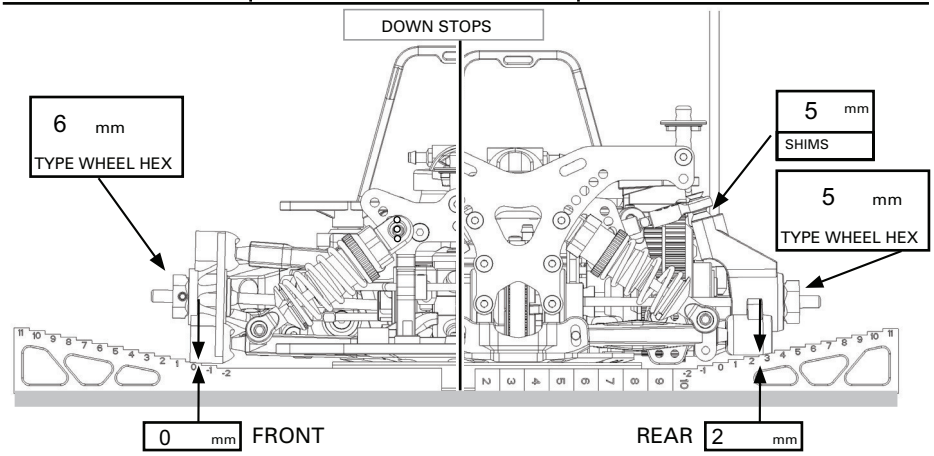

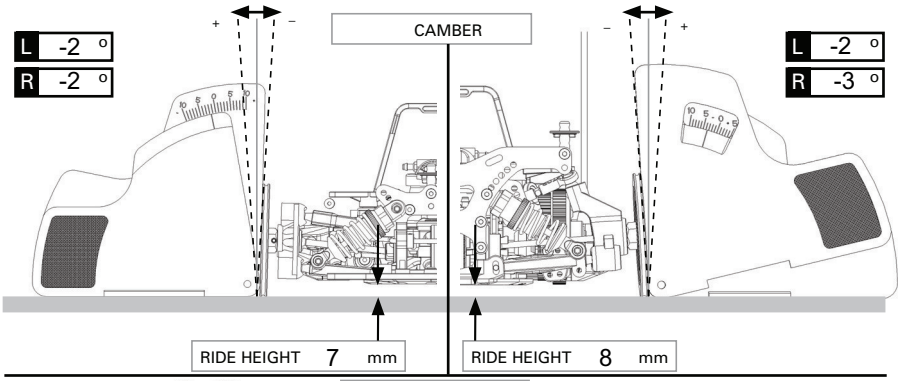

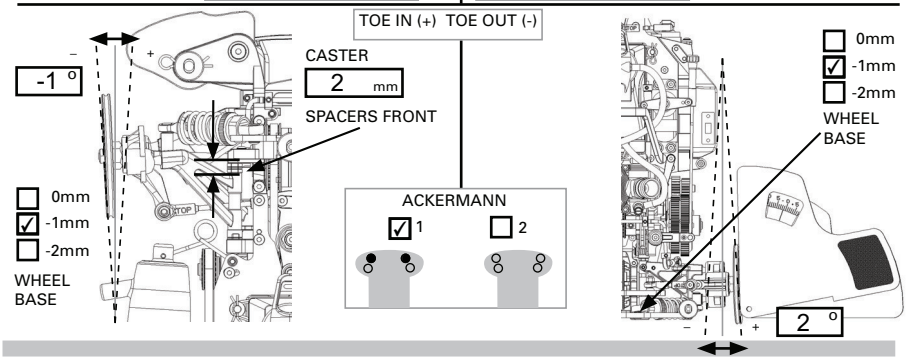
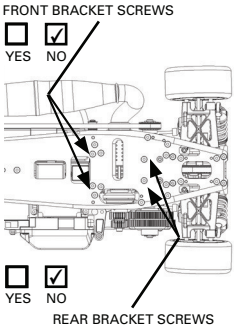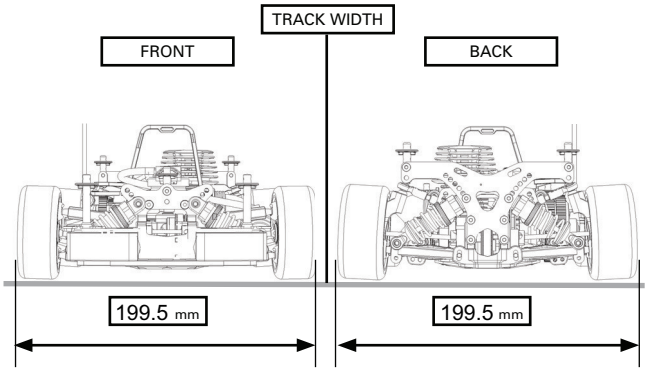
STIFFNERS ☐ YES ☑ NO