SET UP

Serpent 977 VIPER

RACE	AIRTRONICS GP	DATE	MARCH 22-24
TRACK	GLARC	RESULT	
DRIVER:	PAOLO MORGANTI	QUALIFYING POSITION	7TH
LAYOUT:	☐ TECHNICAL ☑ MIXED ☐ FAST	QUALIFYING TIME	
TRACTION:	☐ LOW ☑ MEDIUM ☐ HIGH	FINAL POSITION	2ND
TRACK TEMP	90F	AIR TEMP	81F

1ST	SPUR	2ND

☑	☐	☐	☐	☑	☐
48T	49T	50T	44T	45T	46T

1ST	PINION	2ND

☑	☐	☐	☐	☑	☐
15T	16T	17T	18T	19T	20T

	CENTAX		
CLUTCHBELL	ALU ☐	STEEL ☑	
CLUTCHSHOE	BLACK ☐	YELLOW ☑	RED ☐

FRONT — SHOCK ABSORBERS — REAR

FRONT OIL	600 CST
FRONT SPRING	PURPLE
REAR OIL	600 CST
REAR SPRING	PINK

○ OPEN ● CLOSED

LEFT	RIGHT	TYRES	LEFT	RIGHT
ENNETI	ENNETI	MAKE	ENNETI	ENNETI
32 °	32 °	SHORE	35 °	35 °
mm	66.5 mm	DIAMETER	74 mm	74 mm
mm	mm	5-MIN WEAR	mm	mm

ENGINE			
VERSION		HEADSHIMS	mm
GLOWPLUG		CARB DIA	mm

EXHAUST		
FUEL		%

BODY TYPE		
BUMPER HOLES CUT	YES ☐	NO ☑

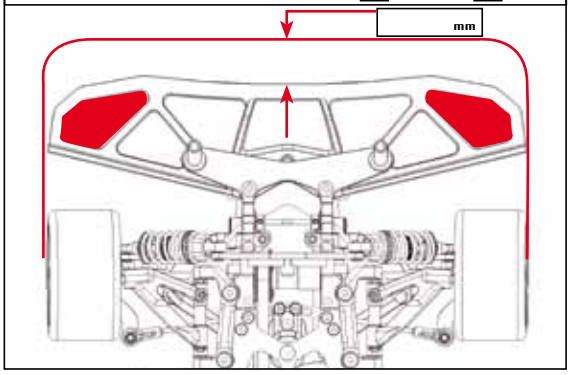

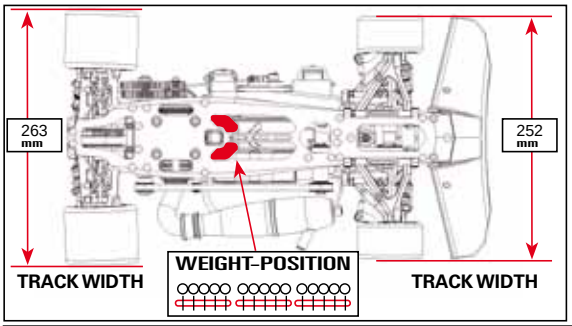

FRONT ● ☑ APPLIED REAR

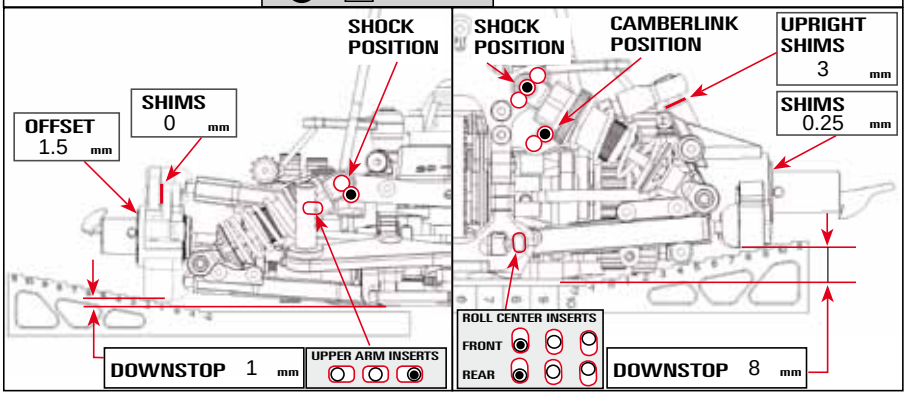

R 2 ° 2 ° L — CAMBER — R 3 ° 2.5 ° L

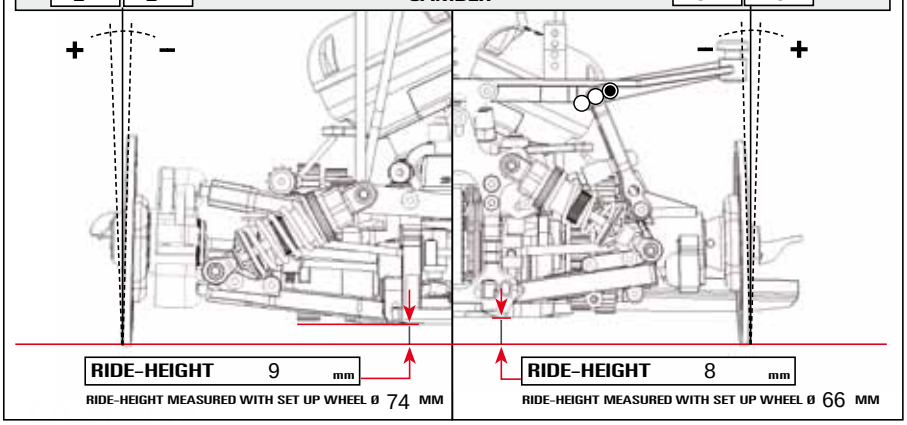

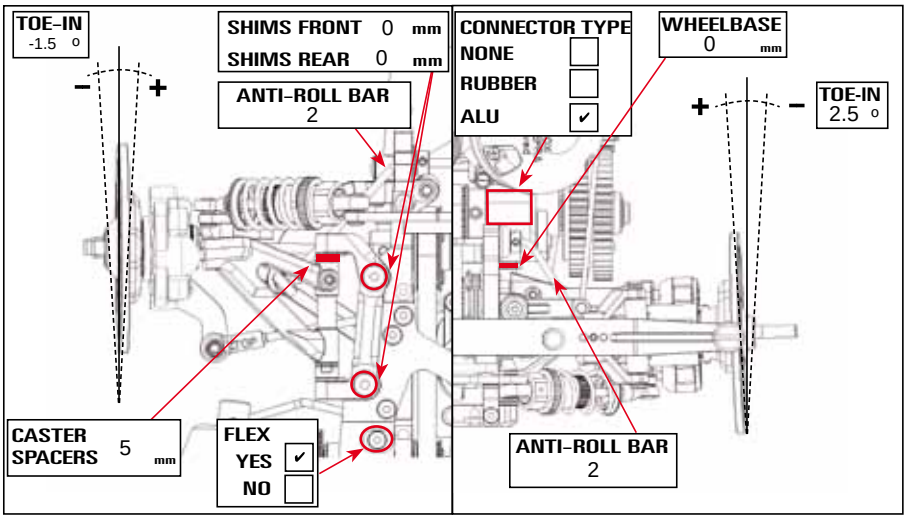

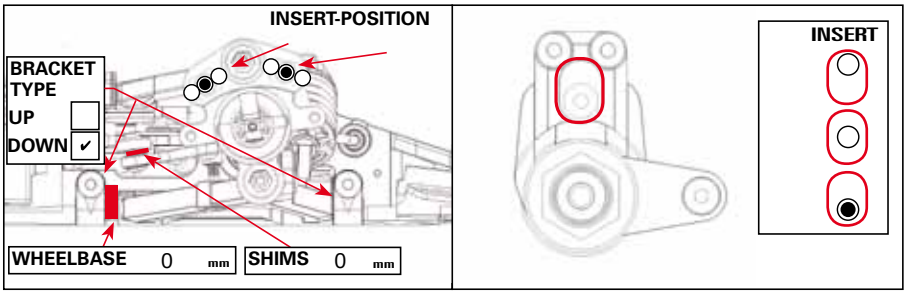

REMARKS