Serpent

SPYDER SRX2

REFERENCE GUIDE

EXPLODED VIEWS AND PARTS LISTS

REF GUIDE:

EXPLODED VIEWS and PARTS-LIST

Contents

FRONT ASSEMBLY I	19
FRONT ASSEMBLY II	20
BALL DIFF ASSEMBLY	21
TRANSMISSION ASSEMBLY	22
REAR ASSEMBLY	23
SHOCKS ASSEMBLY	24
FINAL ASSEMBLY	25
PARTS-LIST	26

FRONT ASSEMBLY I

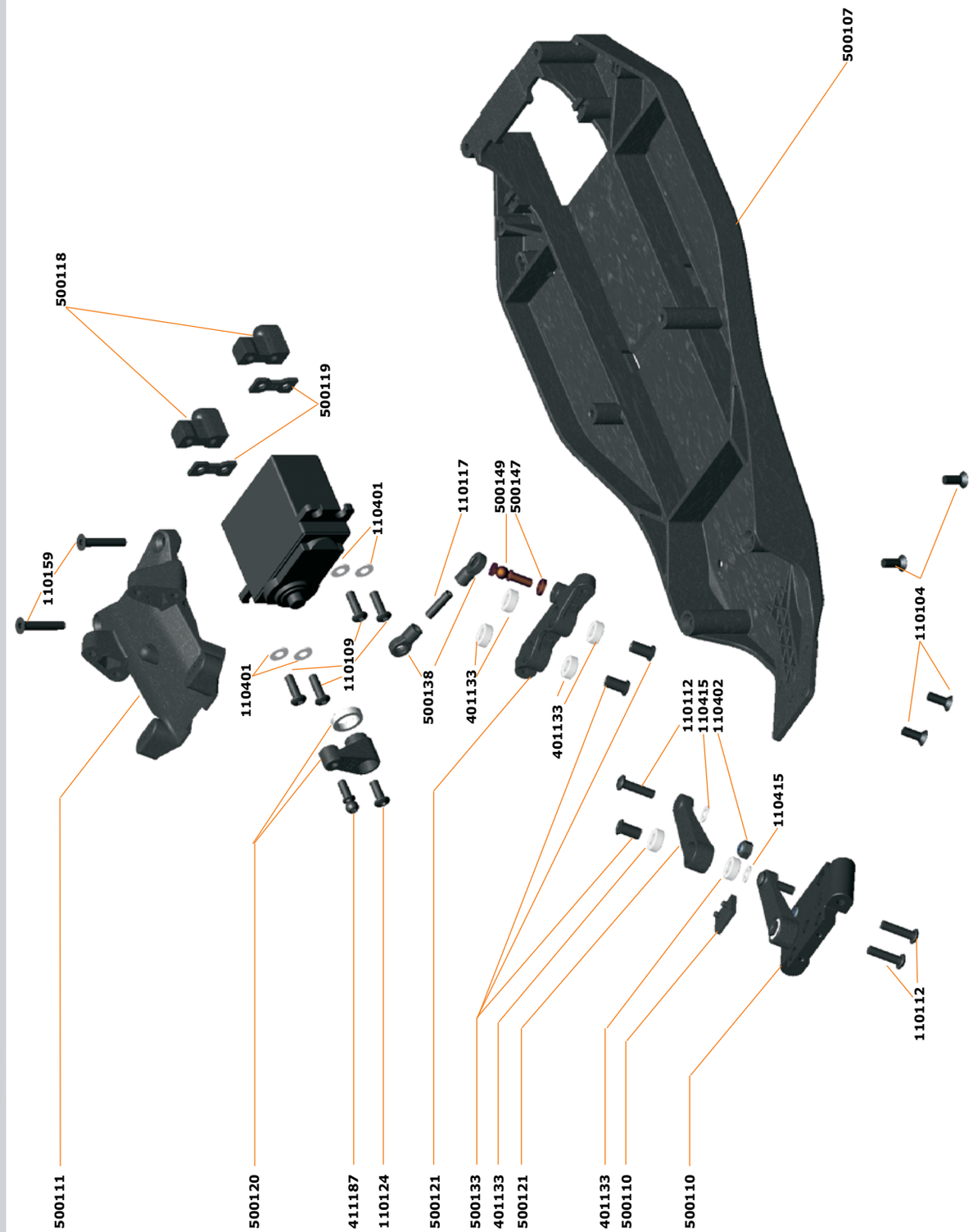

FRONT ASSEMBLY II

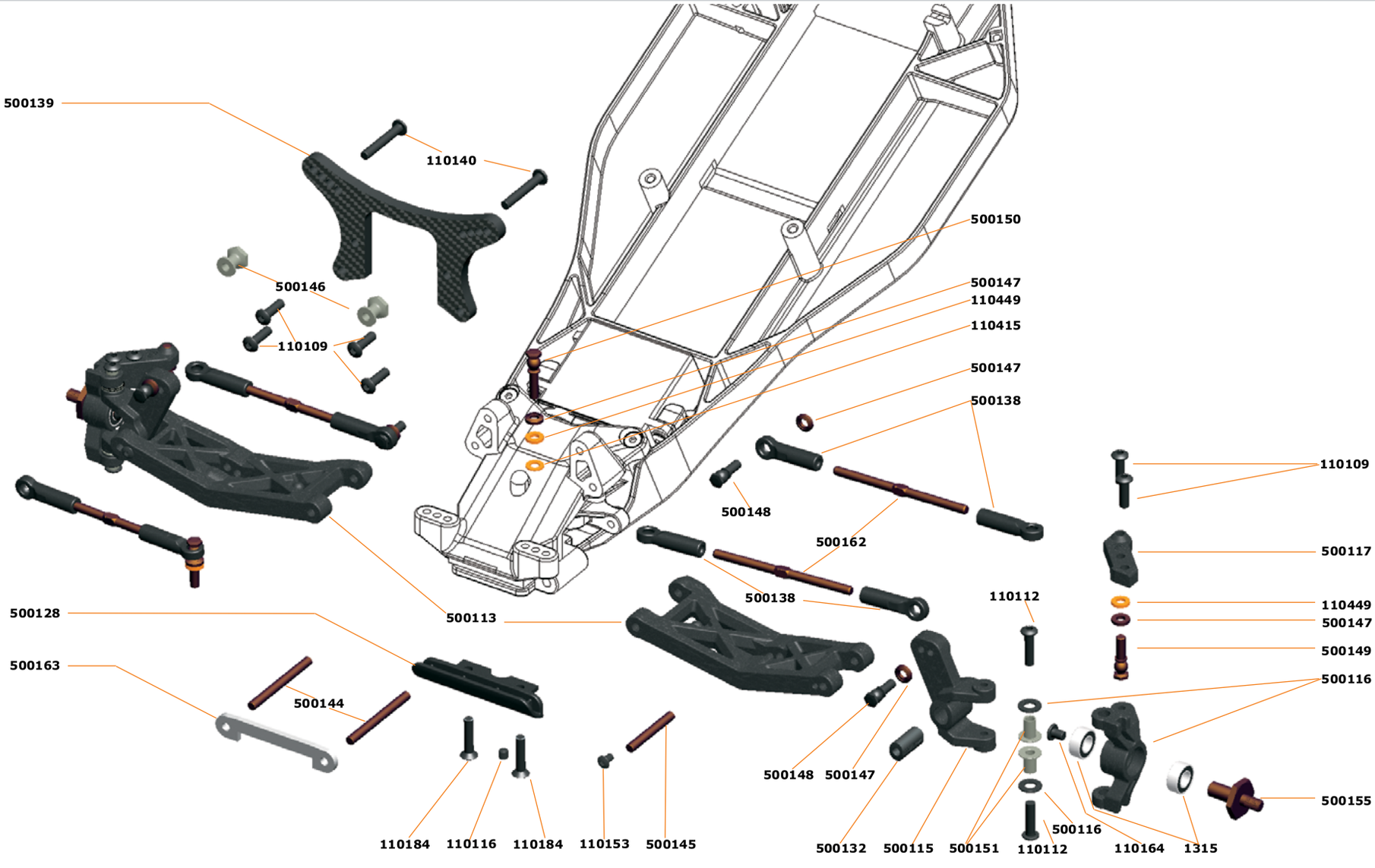

BALL DIFF ASSEMBLY

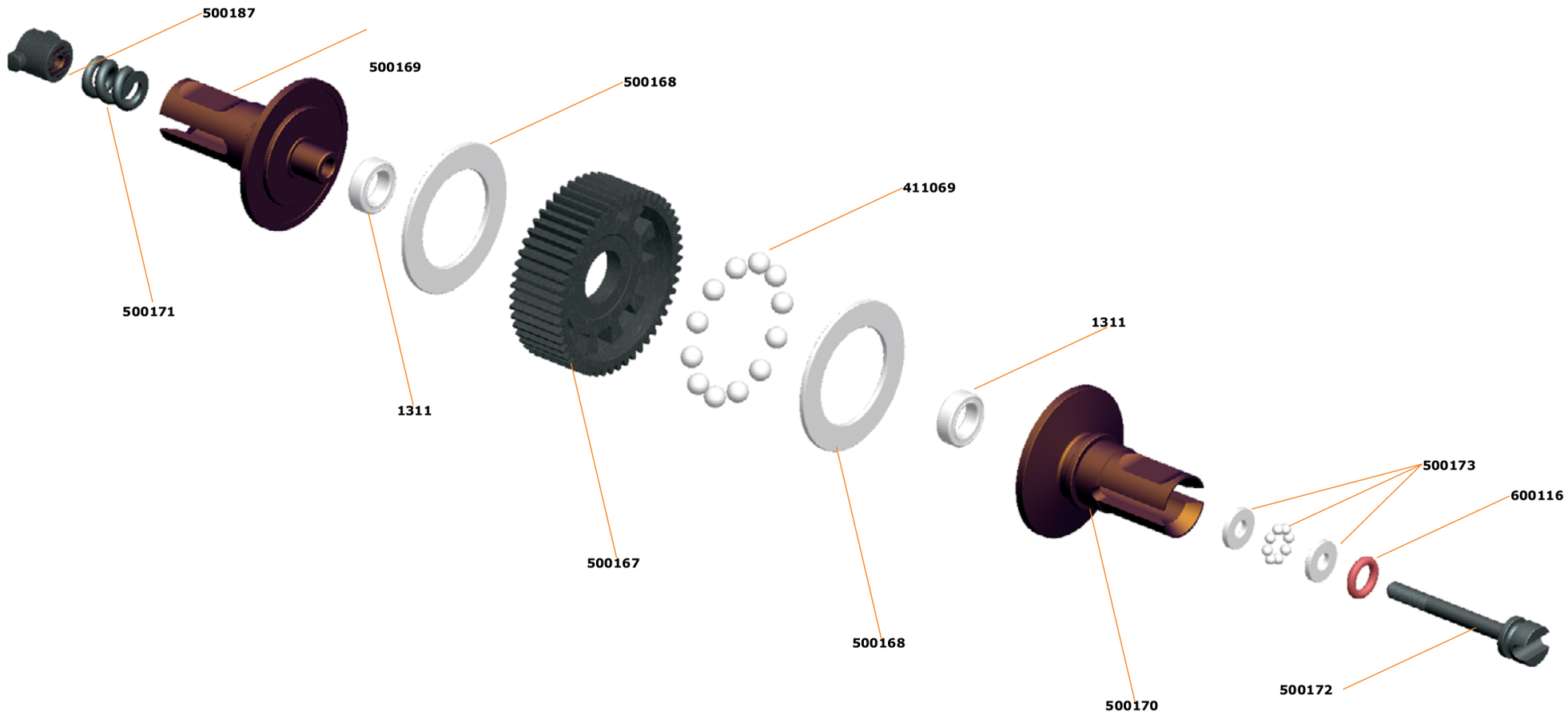

TRANSMISSION ASSEMBLY

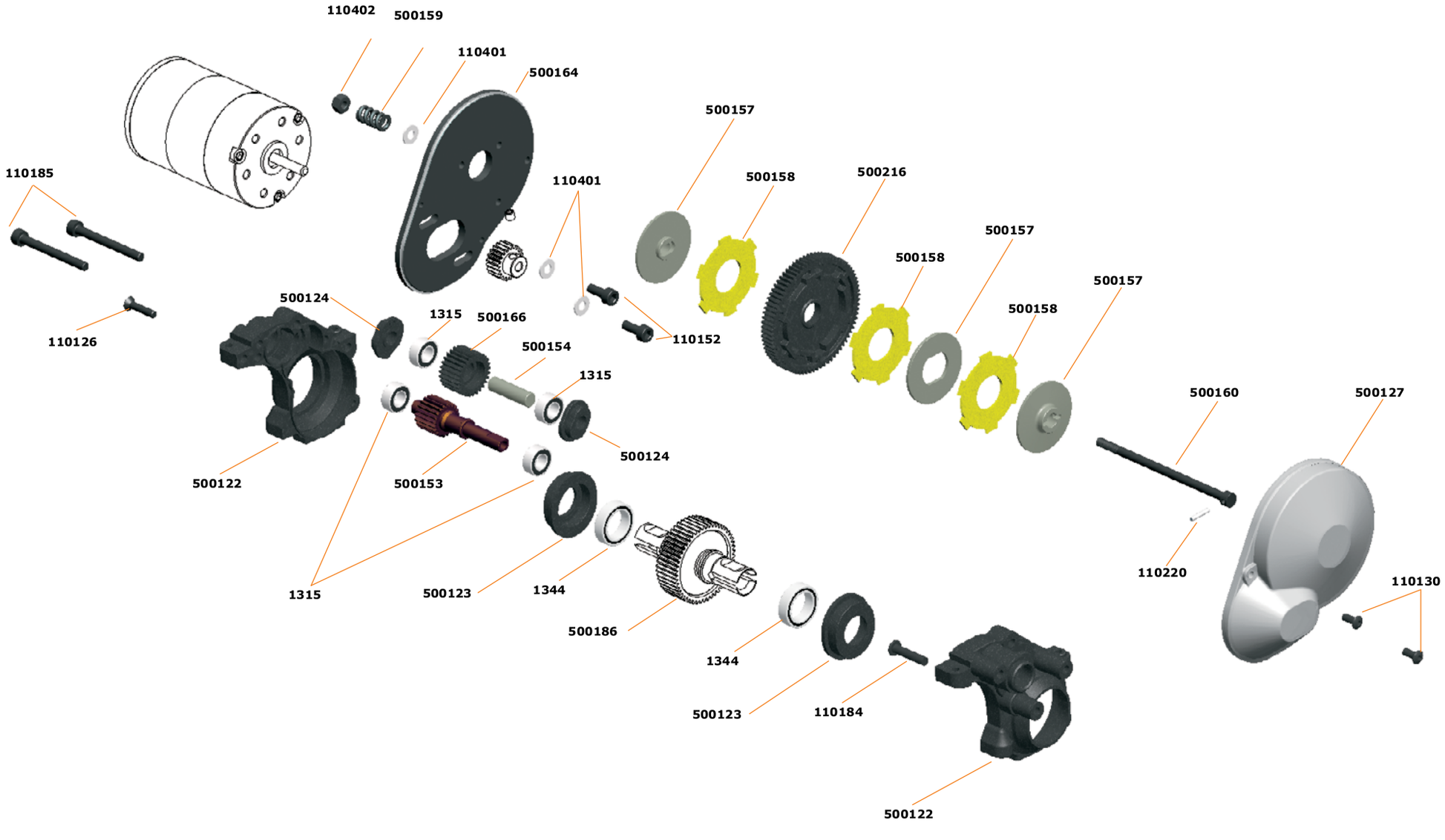

REAR ASSEMBLY

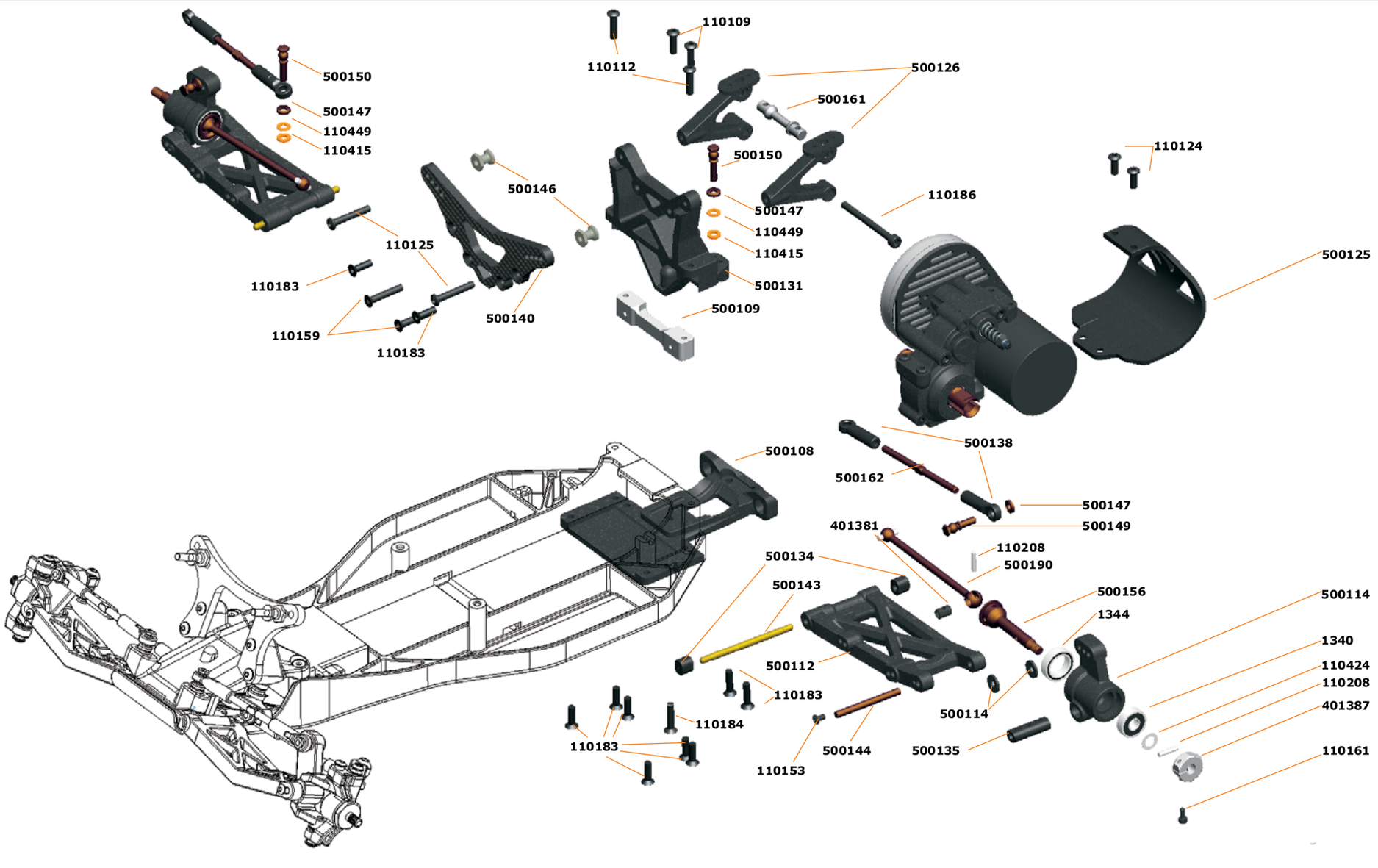

SHOCKS ASSEMBLY

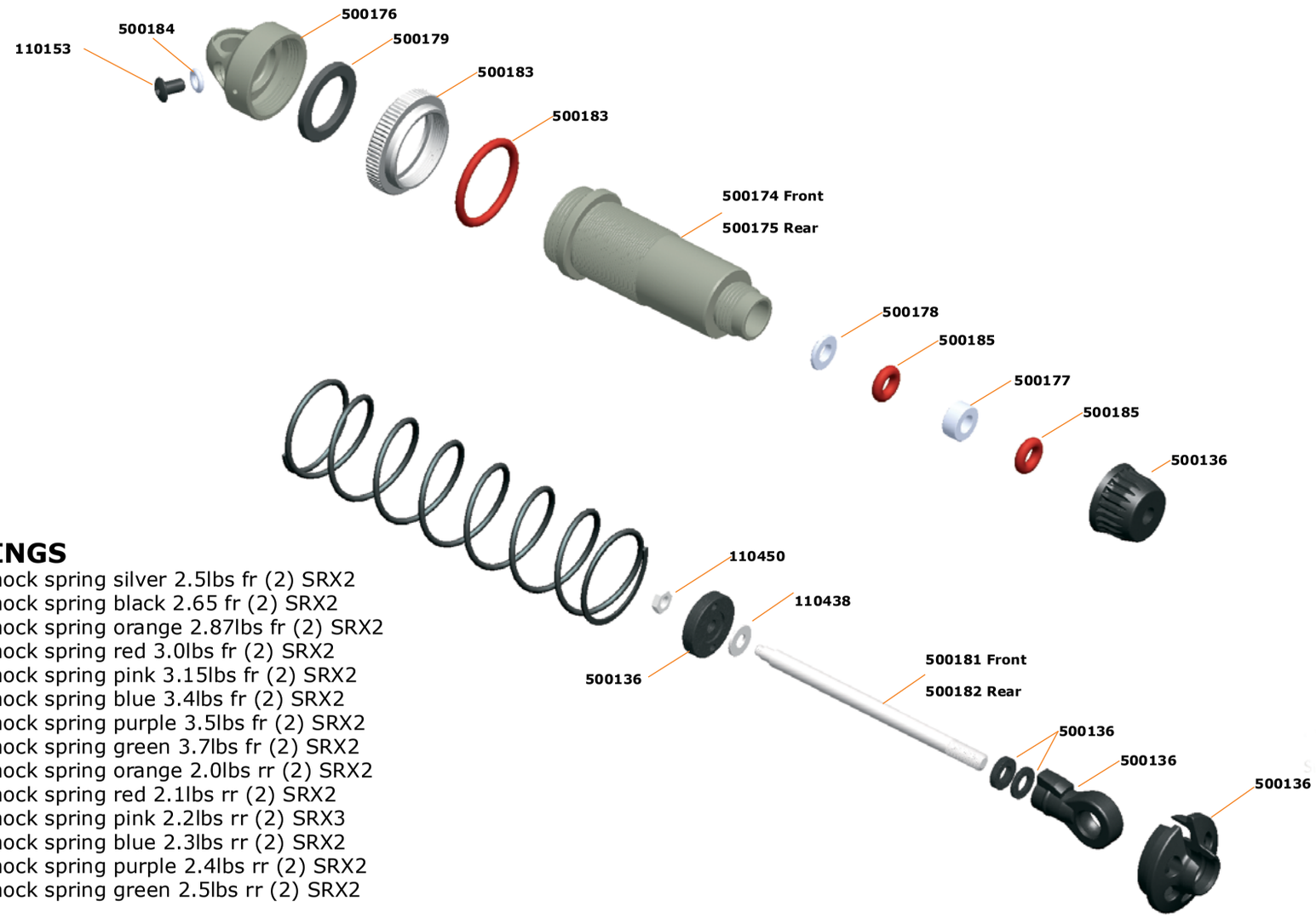

SHOCK SPRINGS

500222	Shock spring silver 2.5lbs fr (2) SRX2
500223	Shock spring black 2.65 fr (2) SRX2
500224	Shock spring orange 2.87lbs fr (2) SRX2
500225	Shock spring red 3.0lbs fr (2) SRX2
500226	Shock spring pink 3.15lbs fr (2) SRX2
500227	Shock spring blue 3.4lbs fr (2) SRX2
500228	Shock spring purple 3.5lbs fr (2) SRX2
500229	Shock spring green 3.7lbs fr (2) SRX2
500230	Shock spring orange 2.0lbs rr (2) SRX2
500231	Shock spring red 2.1lbs rr (2) SRX2
500232	Shock spring pink 2.2lbs rr (2) SRX3
500233	Shock spring blue 2.3lbs rr (2) SRX2
500234	Shock spring purple 2.4lbs rr (2) SRX2
500235	Shock spring green 2.5lbs rr (2) SRX2

FINAL ASSEMBLY

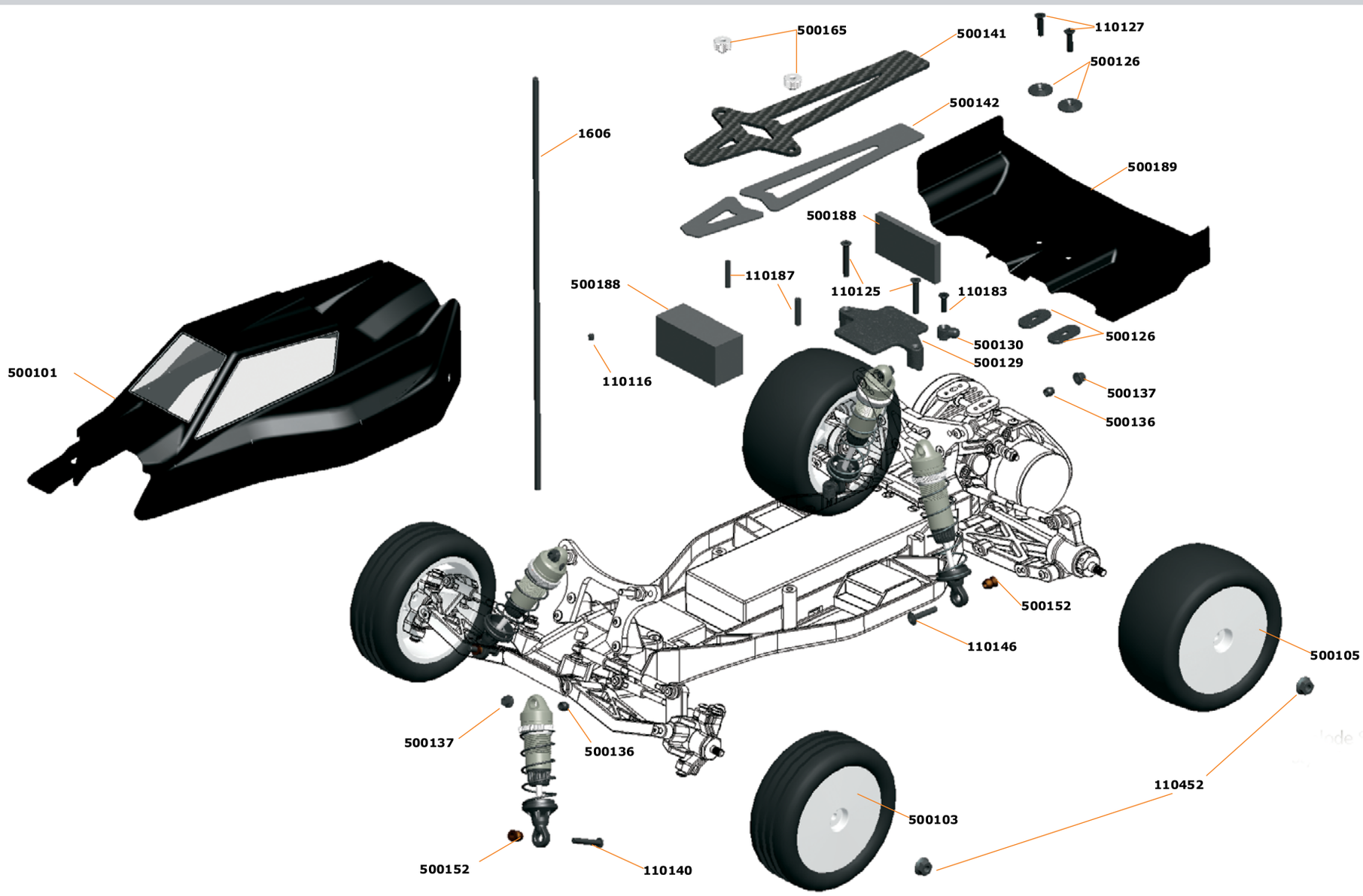

PARTS-LIST

Part no	Description
500001	Serpent Spyder Buggy SXR-2 RM 2wd 1/10

DECALS

1886	Decal serpent black/white 1/10 (2)
1888	Decal serpent chrome 1/10 (2)
500102	Decal sheet Spyder black/white (2)

RADIO INSTALLATION / BATTERY

500129	Speedcontroler mount SRX2 RM
500141	Batteryplate carbon SRX2 RM
500142	Battery plate foam SRX2 RM
500165	Battery plate nut (4) SRX2
500188	Battery case inserts foam (6) SRX2 RM

SERVO SAVER AND STEERING

500117	Steeringarms L+R (3) SRX2
500118	Servomount (2) SRX2
500119	Servomount spacers (8) SRX2
500120	Steeringlever (3) SRX2
500121	Steeringrack (3) SRX2

Optionals

500197	Servomount alu (2) SRX2
500236	Steeringrack alu (3) SRX2

SHOCK ABSORBERS

500136	Shock parts frame (44) SRX2
500137	Nut nylon M3 flanged (8)
500152	Pivotball shock (4) SRX2
500174	Shock body fr (2) SRX2
500175	Shock body rr (2) SRX2
500176	Shock top (2) SRX2
500177	Shock cartridge spacer (4) SRX2
500178	Shock cartridge spacer stepped (4) SRX2
500179	Shock top gasket (4) SRX2
500181	Shock shaft fr (2) SRX2
500182	Shock shaft rr (2) SRX2
500183	Shock adjust nut / oring (2) SRX2
500184	Shock bleeding oring (4) SRX2
500185	Shock oring bottom (4) SRX2

OPTIONALS

500180	Shock membrame (4) SRX2
500199	Shock top bushing delrin (4) SRX2
500201	Shock shaft fr TiN coated (2) SRX2
500202	Shock shaft rr TiN coated (2) SRX2
500238	Shock piston conical 2 holes (4) SRX2
500239	Shock piston conical 3 holes (4) SRX3
500240	Shock piston conical 4 holes (4) SRX4

SPRINGS

500222	Shock spring silver 2.5lbs fr (2) SRX2
500223	Shock spring black 2.65 fr (2) SRX2
500224	Shock spring orange 2.87lbs fr (2) SRX2
500225	Shock spring red 3.0lbs fr (2) SRX2
500226	Shock spring pink 3.15lbs fr (2) SRX2
500227	Shock spring blue 3.4lbs fr (2) SRX2
500228	Shock spring purple 3.5lbs fr (2) SRX2
500229	Shock spring green 3.7lbs fr (2) SRX2
500230	Shock spring orange 2.0lbs rr (2) SRX2
500231	Shock spring red 2.1lbs rr (2) SRX2
500232	Shock spring pink 2.2lbs rr (2) SRX3
500233	Shock spring blue 2.3lbs rr (2) SRX2
500234	Shock spring purple 2.4lbs rr (2) SRX2
500235	Shock spring green 2.5lbs rr (2) SRX2

FRONT SECTION

411187	Pivotball with shaft (2)
500110	Front bulkhead-insert SRX2
500111	Front bulkhead top SRX2
500113	Wishbone fr L+R SRX2
500115	C-hub L+R SRX2
500116	Steeringblock L+R SRX2
500117	Steeringarms L+R (3) SRX2
500118	Servomount (2) SRX2
500119	Servomount spacers (8) SRX2
500120	Steeringlever (3) SRX2
500121	Steeringrack (3) SRX2
500128	Front bumper SRX2
500132	C-hub insert (6) SRX2
500133	Steeringrack bold (4) SRX2
500138	Balljoint set (14) SRX2
500139	Shocktower fr SRX2
500144	Hinge pin fr inner / rr outer (2) SRX2
500145	Hinge pin fr outer (2) SRX2
500146	Shock mount (4) SRX2
500147	Pivotball shim conical (10) SRX2
500148	Pivotball with shaft low (4) SRX2
500149	Pivotball with shaft med (5) SRX2
500150	Pivotball with shaft high (4) SRX2
500151	Casterblock bushing (4) SRX2
500155	Wheel axle fr (2) SRX2
500162	Track rod M3x50 (2) SRX2
500163	Hinge pin brace 25 deg fr SRX2

Optionals

500193	Front wing set SRX2
500194	Antiroll bar set fr SRX2
500198	Pivotball with shaft short (4) SRX2
500200	Front bulkhead inserts alu (6) SRX2
500203	Pivot pin brace 20 deg fr SRX2
500204	Pivot pin brace 30 deg fr SRX2
500208	Antiroll bar fr 0.9 SRX2
500209	Antiroll bar fr 1.0 SRX2
500210	Antiroll bar fr 1.1 SRX2
500237	C-hub L+R alu SRX2
500241	Front wing SRX2
500243	Front bulkhead alu SRX2
500250	Front bulkhead brass SRX2
500258	Antirollbar balljoints (2+2) SRX2

MIDDLE SECTION

500129	Speedcontroler mount SRX2 RM
500130	Bodymount (2) SRX2 RM
500141	Batteryplate carbon SRX2 RM
500142	Battery plate foam SRX2 RM
500165	Battery plate nut (4) SRX2
500188	Battery case inserts foam (6) SRX2 RM

REAR SECTION

401387	Wheelhexagon (2)
500108	Skidplate SRX2 RM
500109	Suspension bracket rr fr SRX2 RM
500112	Wishbone rr L+R SRX2 RM
500114	Upright L+R SRX2
500126	Wingmount-set SRX2 RM
500131	Rear bulkhead SRX2 RM
500134	Rear suspension insert (24) SRX2
500135	Upright inserts (10) SRX2
500140	Shocktower rr SRX2 RM
500146	Shock mount (4) SRX2
500147	Pivotball shim conical (10) SRX2
500149	Pivotball with shaft med (5) SRX2
500150	Pivotball with shaft high (4) SRX2
500161	Wing brace alu SRX2
500162	Track rod M3x50 (2) SRX2
500189	Rear wing 6.5” SRX2

Optionals

500195	Antiroll bar set rr SRX2 RM

500196	Upright L+R alu SRX2
500198	Pivotball with shaft short (4) SRX2
500205	Antiroll bar rr 1.1 SRX2 RM
500206	Antiroll bar rr 1.3 SRX2 RM
500207	Antiroll bar rr 1.5 SRX2 RM
500211	Wheelhexagon +0.75mm offset (2)
500212	Wheelhexagon -0.75mm offset (2)
500244	Rear bulkhead weight SRX2
500245	Suspension bracket rr fr brass SRX2 RM
500251	Rear wing 6.0” SRX2
500252	Rear wing 7.0” SRX2
500255	Suspension insert rr 3deg alu (2) SRX2
500258	Antirollbar balljoints (2+2) SRX2

TRANSMISION

411069	Differential balls steel 1/8” (12)
500122	Transmissioncase SRX2 RM
500123	Diffheight insert (4) SRX2
500124	Transmissioncase insert (6) SRX2 RM
500125	Motorguard rear SRX2 RM
500127	Gear cover SRX2
500153	Top shaft 21T SRX2
500154	Idler gear shaft SRX2
500157	Slipper plate alu (3) SRX2
500158	Slipper pad yellow (3) SRX2
500159	Slipper spring (2) SRX2
500160	Slipper bolt topshaft (2) SRX2
500164	Motor plate SRX2 RM
500166	Idler gear 27T SRX2
500167	Diff pully balldiff 51T (1) SRX2
500168	Diff ring balldiff (2) SRX2
500169	Balldiff outdrive male SRX2
500170	Balldiff outdrive female SRX2
500171	Balldiff spring (2) SRX2
500172	Balldiff bolt (2) SRX2
500173	Balldiff thrustbearing SRX2
500186	Balldiff set SRX2

OPTIONALS

411107	Diff balls. 1/8 ceramic (12)
500192	Geardiff set SRX2
500242	Slipper plates vented alu (3) SRX2
500246	Geardiff gears 14T(4)+28T(2) SRX2
500247	Diff pin 14T (2) SRX2
500248	Geardiff o-ring (4) SRX2
500249	Geardiff outdrive (2) SRX2
500253	Geardiff cap L+R SRX2
500254	Geardiff housing 51T SRX2
500256	Thrustbearing carbide balldiff SRX2
500257	Geardiff nut (4) SRX2
500260	Idler gear 27T alu SRX2

SPURGEAR

500213	Spur gear 70T SRX2
500214	Spur gear 72T SRX2
500215	Spur gear 76T SRX2
500216	Spur gear 78T SRX2
500217	Spur gear 80T SRX2
500218	Spur gear 82T SRX2
500219	Spur gear 84T SRX2
500220	Spur gear 86T SRX2
500221	Spur gear 88T SRX2

PINIONS

120156	Motor-pinion alu hard 48P / 18T
120157	Motor-pinion alu hard 48P / 19T
120158	Motor-pinion alu hard 48P / 20T
120159	Motor-pinion alu hard 48P / 21T
120160	Motor-pinion alu hard 48P / 22T
120161	Motor-pinion alu hard 48P / 23T
120162	Motor-pinion alu hard 48P / 24T
120163	Motor-pinion alu hard 48P / 25T
120164	Motor-pinion alu hard 48P / 26T
120165	Motor-pinion alu hard 48P / 27T
120166	Motor-pinion alu hard 48P / 28T
120167	Motor-pinion alu hard 48P / 29T
120168	Motor-pinion alu hard 48P / 30T

BALL-BEARINGS

1340	Ball-bearing 5x13 hs (2)
1311	Ballbearing 5x8x2.5 (2)
1315	Ballbearing 5x10x4 (2)
1344	Ball-bearing 10x15x4 hs (2)
401133	Ballbearing 4x8 (2)
500173	Balldiff thrustbearing SRX2

TOOLS

190506	Toolset for onroad (17pcs) with tools bag
190507	Toolset for ep (16pcs) with tools bag
190508	Toolset for offroad (20pcs) with tools bag
190509	Allen wrench 1.5 x 120mm
190510	Allen wrench 2.0 x 120mm
190511	Allen wrench 2.5 x 120mm
190512	Allen wrench 3.0 x 120mm
190513	Ball driver hex wrench 2.0 x 120mm
190514	Ball driver hex wrench 2.5 x 120mm
190515	Ball driver hex wrench 3.0 x 120mm
190516	Tool tip allen wrench 1.5 x 120mm
190517	Tool tip allen wrench 2.0 x 120mm
190518	Tool tip allen wrench 2.5 x 120mm
190519	Tool tip allen wrench 3.0 x 120mm
190520	Tool tip ball driver hex wrench 2.0 x 120mm
190521	Tool tip ball driver hex wrench 2.5 x 120mm
190522	Tool tip ball driver hex wrench 3.0 x 120mm
190523	Turnbuckle wrench 3mm
190524	Turnbuckle wrench 4mm
190525	Turnbuckle wrench 5mm
190526	Flat head screwdriver 3.0 x 150mm
190527	Flat head screwdriver 4.0 x 150mm
190528	Phillips screwdriver 2.0 x 45mm
190529	Phillips screwdriver 3.5 x 120mm
190530	Phillips screwdriver 5.8 x 120mm
190539	Nut driver 4.5 x 100mm
190531	Nut driver 5.0 x 100mm
190532	Nut driver 5.5 x 100mm
190533	Nut driver 7.0 x 100mm
190534	Reamer with end cap for lexan body

FASTNERS

110101	Screw allen countersunk m4x8 (10)
110102	Screw allen countersunk m4x10 (10)
110103	Screw allen countersunk m4x16 (10)
110104	Screw allen countersunk m3x8 (10)
110105	Screw allen countersunk m4x12 (10)
110106	Screw allen flanged roundhead m5x12 (10)
110107	Screw allen cilinderhead m3x16 (10)
110108	Screw allen roundhead m3x6 (10)
110109	Screw allen roundhead m3x10 (10)
110110	Screw allen roundhead m3x16 (10)
110111	Screw allen roundhead m3x14 (10)
110112	Screw allen roundhead m3x12 (10)
110113	Screw allen roundhead m4x8 (10)
110114	Setscrew allen m3x8 (10)
110115	Setscrew allen m3x4 (10)
110116	Setscrew allen m3x3 (10)
110117	Setscrew allen m3x12 (10)
110118	Setscrew allen m4x4 (10)
110119	Setscrew allen m4x6 (10)
110120	Setscrew allen m4x10 (10)

110121 Setscrew allen m5x6 (10)
110122 Screw allen countersunk m3x6 (10)
110123 Screw philips roundhead 3.5x13 (10)
110124 Screw allen roundhead m3x8 (10)
110125 Screw allen countersunk m3x20 (10)
110126 Screw allen countersunk m2.5x12 (10)
110127 Screw allen countersunk m3x12 (10)
110128 Screw allen roundhead m3x5 (10)
110129 Screw allen cilinderhead m3x10 (10)
110130 Screw allen roundhead m2.5x6 (10)
110131 Screw allen roundhead m2.5x10 (10)
110132 Screw allen countersunk m3x16 (10)
110133 Screw philipshead countersunk 2.5x8 wide (10)
110134 Screw philipshead countersunk 2.5x10 wide (10)
110135 Screw allen countersunk M2.5x10 (10)
110136 Screw allen countersunk M2.5x8 (10)
110137 Setscrew allen M3x6 (10)
110138 Screw allen countersunk M4x14 (10)
110139 Screw allen countersunk M3x40 (10)
110140 Screw allen roundhead M3x20 (10)
110141 Screw allen roundhead M3x22 (10)
110142 Screw allen roundhead M3x25 (10)
110143 Screw allen roundhead M4x18 (10)
110144 Screw allen roundhead M3x18 (10)
110145 Screw allen roundhead flanged M3x12 (10)
110146 Screw allen roundhead flanged M3x16 (10)
110147 Screw ph roundhead M2.5x5 (10)
110148 Setscrew allen M5x4 (10)
110149 Screw allen countersink M2x10 (10)
110150 Screw M6x12 nylon black (2)
110151 Screw allen cilinderhead M4x10 (10)
110152 Screw allen cilinderhead M3x8 (10)
110153 Screw allen roundhead M2.3x4(10)
110154 Setscrew allen M3x10 (10)
110155 Setscrew allen M3x5 (10)
110156 Screw allen countersunk M2.2x6 (10)
110157 Screw allen countersunk M3x5 (10)
110158 Screw allen countersunk M3x15 (10)
110159 Screw allen countersunk M3x18 (10)
110160 Screw allen cilinderhead M2.2x12 (10)
110161 Screw allen cilinderhead M2x6 (10)
110162 Setscrew allen M3x2.5 (10)
110163 Setscrew allen M3x2 (10)
110164 Screw allen roundhead M3x4 (10)
110165 Screw allen cilinderhead M2x5 (10)
110166 Screw allen countersunk M2.5x5 (10)
110167 Screw allen roundhead flanged M3x18 (10)
110168 Screw allen roundhead flanged M3.5x10 (10)
110169 Screw allen roundhead flanged M4x10 (10)
110170 Screw allen roundhead flanged M3x28 (10)
110171 Screw ph roundhead widethread 2.5x6 (10)
110172 Screw allen roundhead flanged M3X6 (10)
110173 Screw ph countersunk widethread 2.5x12 (10)
110174 Screw allen countersunk M4x6 (10)
110175 Screw allen cilinderhead M3x40 (10)
110176 Screw allen cilinderhead M3x18 (10)
110177 Screw allen roundhead M4x12 (10)
110178 Screw allen cilinderhead M3x14 (10)
110179 Screw allen roundhead M2.5x8 (10)
110180 Setscrew allen M5x10 (10)
110181 Screw M5x10 + Nut nylon black (4+4)
110182 Screw allen roundhead M2x4 (10)
110183 Screw allen countersunk M3x10 (10)
110184 Screw allen countersunk M3x14 (10)
110185 Screw allen cilinderhead M3x30 (10)
110186 Screw allen cilinderhead M3x35 (10)
110187 Setscrew allen M3x16 (10)
110200 Pin 2.5x8 (10)
110201 Pin 3x12 (10)
110202 Pin 5x5 (10)
110203 Pin 3x14 (10)
110204 Pin 3x20 (10)
110205 Pin 3x22 (10)
110206 Pin 2.5x22 (10)
110207 Pin 2.5x12 (10)
110208 Pin nra 2x9.8 (4)
110209 Pin nra 2x18 (4)
110210 Pin 3x13 (10)
110211 Pin 2.5x13 (10)
110212 Pin 2.5x17 (10)
110213 Pin 2.5x10 (10)
110214 Pin 3x15 (10)
110215 Pin 2x12 (10)
110216 Pin 2.5x15 (10)
110217 Pin 2x9 (10)
110218 Pin 3x10 (10)
110219 Pin 2x14 (10)
110220 Pin 1.5x8 (10)
110300 E-clip 2.3 (10)
110301 E-clip 3.2 (10)
110302 E-clip 4.0 (10)
110303 E-clip 5.0 (10)
110304 E-clip 7.0 (10)
110305 Seger clip 12x1.0 (10)
110306 E-clip 6.0 (10)
110307 E-clip 9.0 (10)
110400 Shim 6.0x10x0.2(10)
110401 Shim3.2x7x0.5 (10)
110402 Nut nylock M3 (10)
110403 Nut nylock M4 (10)
110404 Shim 6x8x0.3 (10)
110405 Nut nylock M4 flanged (10)
110406 Nut nylock M2.2 (10)
110407 Nut M3 (10)
110408 Shim 3X5X0.3 (10)
110409 Shim 3X5X1 (10)
110410 Shim 3X5X2 (10)
110411 Shim 3X5X4 (10)
110412 Shim 3.5X8X1 (10)
110413 Shim 3.5X12X0.2 (10)
110414 Shim 3X6X0.1 (10)
110415 Shim 3X6X0.5 (10)
110416 Shim 3X6X0.8 (10)
110417 Shim 3X6X3 (10)
110418 Shim 4X8X0.1 (10)
110419 Shim 4X9.5X1 (10)
110420 Shim 4X9.5X2(10)
110421 Shim 4X9.5X4(10)
110422 Shim 4X10X0.3 (10)
110423 Shim 5X8X0.1 (10)
110424 Shim 5X8X0.3 (10)
110425 Shim 5X10X0.3 (10)
110426 Shim 5X10X0.5 (10)
110427 Shim 5X15X0.3 (10)
110428 Shim 6.5X8X0.25 (10)
110429 Shim 6X11.75X0.2 (10)
110431 Shim 8X11X0.1 (10)
110432 Shim 8X11X0.2 (10)
110433 Shim 12X15X0.25 (10)
110434 Shim 12X18X0.3 (10)
110435 Shim 13X16X0.2 (10)
110436 Shim 3x5x3 (10)

110437 Nut M2.5 (10)
110438 Shim 2.5x6x0.5 (10)
110439 Shim 3x7.5x1 (10)
110440 Shim 2.5x5x0.4 (10)
110441 Nut nylock M3 flanged (10)
110442 Shim 4x8x0.6 (10)
110443 Shim 5x15x0.2 (10)
110444 Nut M4 nylon (10)
110445 Shim 4x10x0.2 (10)
110446 Shim 5x15x0.2 (10)
110447 Shim 3x7x7 (10)
110448 Shim 3x6x6 (10)
110449 Shim 3x6x1 (10)
110450 Nut M2 (10)
110451 Nylock nut M4 flanged alu (10)
110452 Nut M4 flanged knurled (10)

MERCHANDISING

1896 Cap serpent black-orange
190172 Winter jacket Serpent black-orange hooded (M)
190173 Winter jacket Serpent black-orange hooded (L)
190174 Winter jacket Serpent black-orange hooded (XL)
190175 Winter jacket Serpent black-orange hooded (2XL)
190176 Winter jacket Serpent black-orange hooded (3XL)
190208 Winter jacket Serpent black-orange hooded (4XL)
190182 T-shirt Serpent Splash white (S)
190183 T-shirt Serpent Splash white (M)
190184 T-shirt Serpent Splash white (L)
190185 T-shirt Serpent Splash white (XL)
190186 T-shirt Serpent Splash white (XXL)
190187 T-shirt Serpent Splash white (XXXL)
190188 T-shirt Serpent Splash orange (S)
190189 T-shirt Serpent Splash orange (M)
190190 T-shirt Serpent Splash orange (L)
190191 T-shirt Serpent Splash orange (XL)
190192 T-shirt Serpent Splash orange (XXL)
190193 T-shirt Serpent Splash orange (XXXL)
190194 T-shirt Serpent Splash black (S)
190195 T-shirt Serpent Splash black (M)
190196 T-shirt Serpent Splash black (L)
190197 T-shirt Serpent Splash black (XL)
190198 T-shirt Serpent Splash black (XXL)
190199 T-shirt Serpent Splash black (XXXL)
190201 Hoody sweater Serpent black-zip (S)
190202 Hoody sweater Serpent black-zip (M)
190203 Hoody sweater Serpent black-zip (L)
190204 Hoody sweater Serpent black-zip (XL)
190205 Hoody sweater Serpent black-zip (2XL)
190206 Hoody sweater Serpent black-zip (3XL)
190207 Hoody sweater Serpent black-zip (4XL))
190502 Pit-bag medium. 3 drawers

www.serpent.com - info@serpent.com

Ref guide SRX2 RM version 1