SET UP

Serpent 977 VIPER

RACE	ENS Round1	DATE	
TRACK	Melzo	RESULT	
DRIVER:	Michael Salven	QUALIFYING POSITION	
LAYOUT:	☐ TECHNICAL ☑ MIXED ☐ FAST	QUALIFYING TIME	
TRACTION:	☐ LOW ☐ MEDIUM ☑ HIGH	FINAL POSITION	
TRACK TEMP		AIR TEMP	

1ST	SPUR	2ND

48T	49T	50T	44T	45T	46T
☐	☑	☐	☐	☑	☐

1ST	PINION	2ND

15T	16T	17T	18T	19T	20T
☑	☐	☐	☐	☑	☐

CENTAX

CLUTCHBELL	ALU ☑	STEEL ☐
CLUTCHSHOE	BLACK ☑ YELLOW ☐	RED ☐

SHOCK ABSORBERS

FRONT		REAR
OIL 500 CST		OIL 600 CST
SPRING purple	○ OPEN ● CLOSED	SPRING pink

LEFT	RIGHT	TYRES	LEFT	RIGHT
Matrix	Matrix	MAKE	Matrix	Matrix
32 °	32 °	SHORE	35 °	35 °
69 mm	69 mm	DIAMETER	76 mm	76 mm
mm	mm	5-MIN WEAR	mm	mm

ENGINE	Picco Torque .21		
VERSION	X-Type World	HEADSHIMS	0.4 mm
GLOWPLUG	7 cold	CARB DIA	9.0 mm

EXHAUST	2069	
FUEL	Runner Time	16 %
BODY TYPE	Protoform R18	
BUMPER HOLES CUT	YES ☐	NO ☑

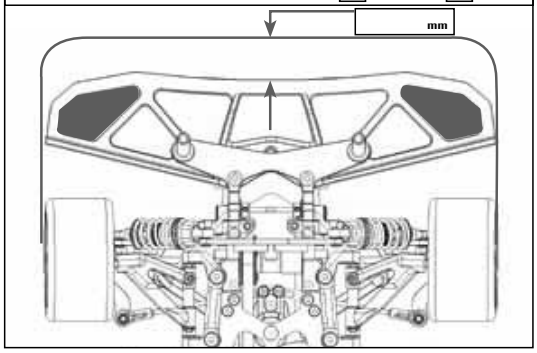

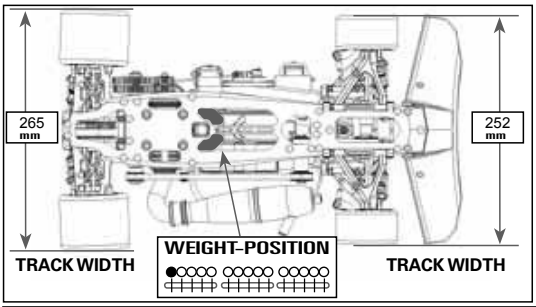

FRONT ● ☑ APPLIED REAR

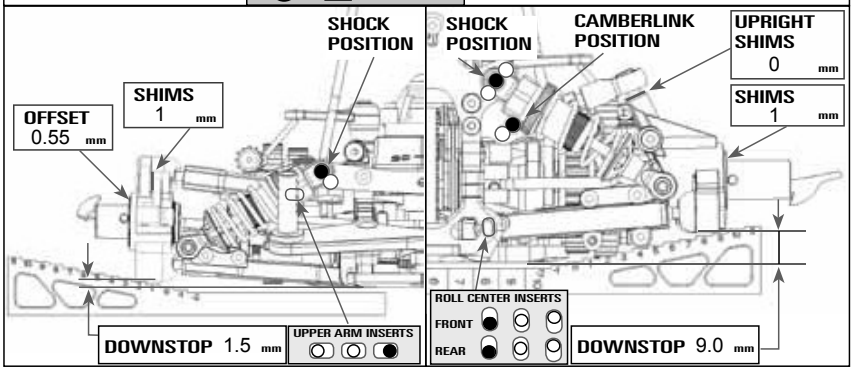

R -2.0 ° -2.0 ° L CAMBER R -2.5 ° -3.0 ° L

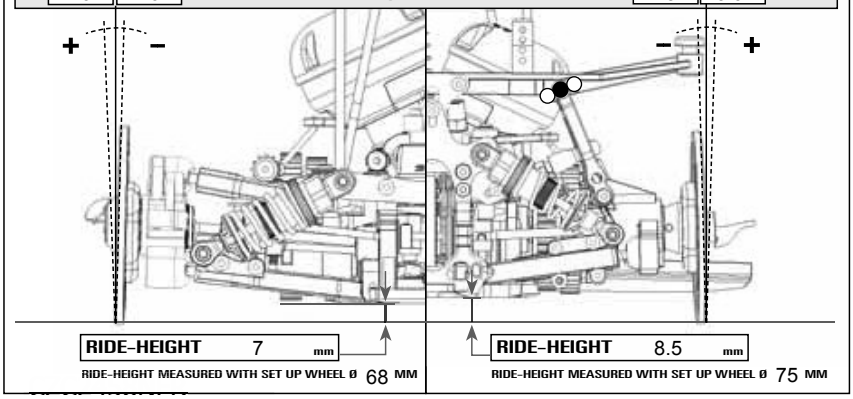

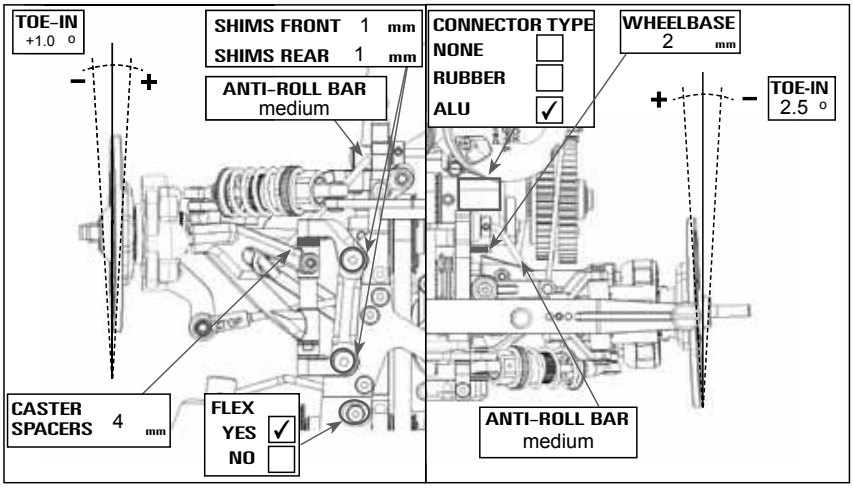

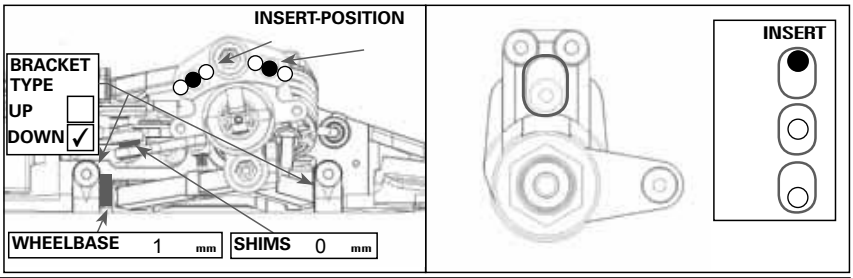

REMARKS