# SET UP

Serpent 977 VIPER

| RACE | ENS 2015 R1 | DATE | 19-04-2015 |
|---|---|---|---|
| TRACK | Bologna | QUALIFYING POSITION | |
| DRIVER | | QUALIFYING TIME | |
| TRACTION: LOW ☑ MEDIUM ☐ HIGH ☐ | | STARTING POSITION | |
| TRACK TEMP | | AIR TEMP | |
| | | FINAL POSITION | |

| 1ST | | SPUR | | 2ND |
|---|---|---|---|---|
| ☐ 48 | ☑ 49 | ☐ 50 | ☐ 44 | ☑ 45 | ☐ 46 |

| 1ST | | PINION | | 2ND |
|---|---|---|---|---|
| ☑ 15 | ☐ 16 | ☐ 17 | ☐ 18 | ☑ 19 | ☐ 20 |

## SHOCK ABSORBERS

| FRONT | | REAR | |
|---|---|---|---|
| OIL | AE 55 cst | OIL | AE60 cst |
| SPRINGS | Green | SPRINGS | Pink |

○ Open
● Closed

| FRONT | | TYRES | REAR | |
|---|---|---|---|---|
| RIGHT | LEFT | Controlled Tyre ☐ | RIGHT | LEFT |
| Control | | MAKE | Control | |
| | | SHORE | | |
| | | DIAMETER | | |
| | | 5-MIN WEAR | | |

| FRONT | | | REAR | | |
|---|---|---|---|---|---|
| ☑ | ☐ | ☐ | ☐ | ☐ | ☑ |
| SOFT | MEDIUM | HARD | SOFT | MEDIUM | HARD |

## ENGINE

| | | | |
|---|---|---|---|
| ENGINE | Novarossi | | |
| VERSION | Mito | HEADSHIMS | std mm |
| GLOWPLUG | 8 H | CARB DIA | 9 mm |
| PIPE | 2015 | MANIFOLD | 6 |
| FUEL | Mecca | NITRO | 16 % |

## CENTAX

| | | | |
|---|---|---|---|
| CLUTCHBELL | ALU ☑ | STEEL ☐ | |
| CLUTCHSHOE | YELLOW ☐ | RED ☐ | BLACK ☑ |
| CLUTCH SPRING | std | CLUTCH BELL GAP | 0.65 mm |

## AERODYNAMIC CONFIGURATION

**BODY**

BRAND PF TYPE R18

| BODY POSITION | AIR TRIM POSITION | BUMPER HOLES CUT |
|---|---|---|
| mm | 10 mm | ☑ YES ☐ NO |

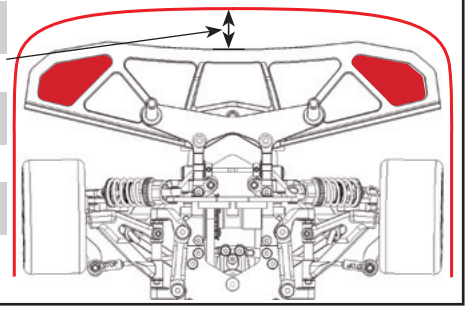

## REMARKS

Alu servo saver / Alu wheels axle

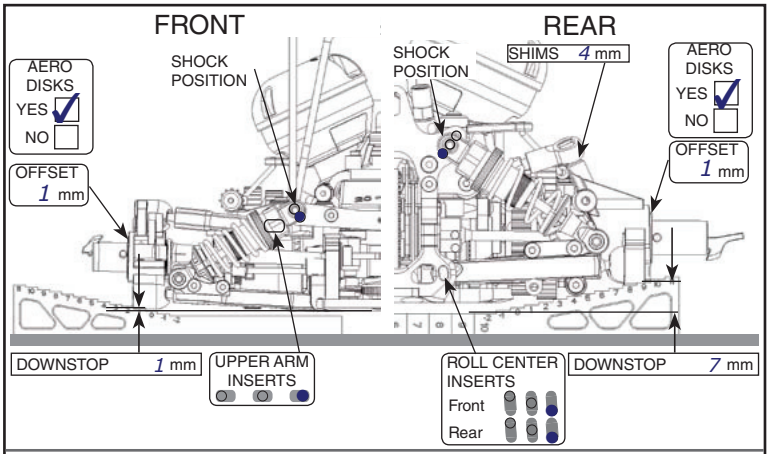


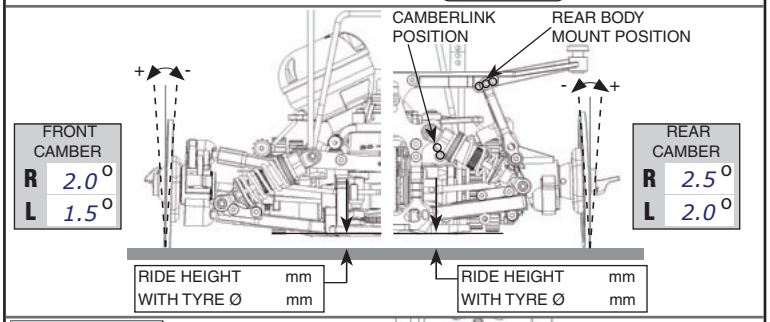


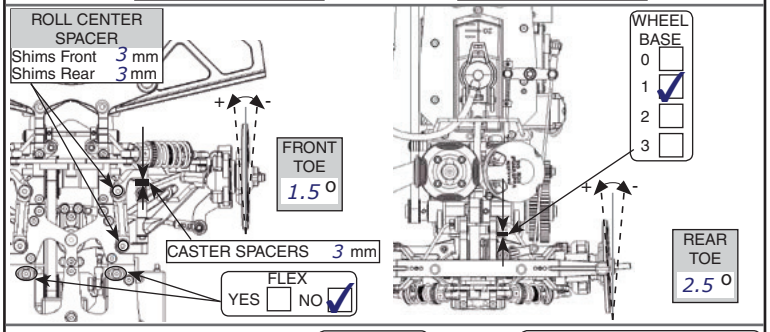


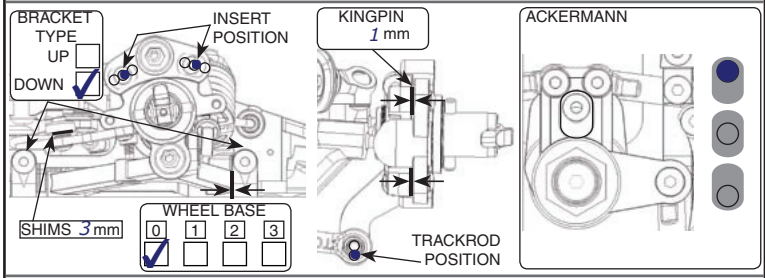


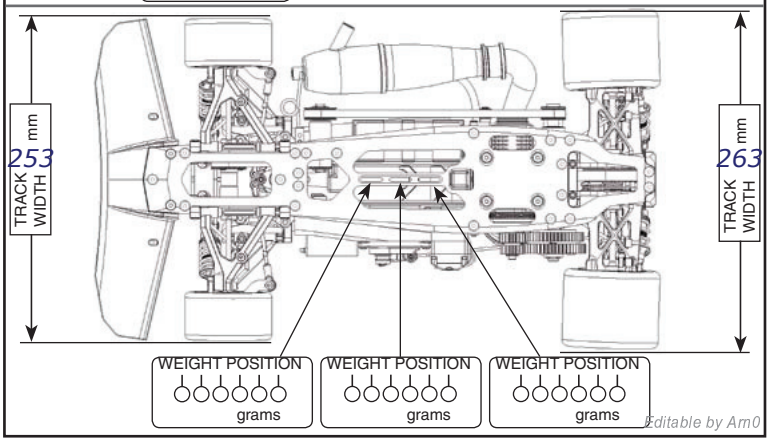


Editable by Arn0