SET UP

Serpent 748 NATRIX

RACE	1 Ens Bologna	DATE	
TRACK	Bologna	QUALIFYING POSITION	3
DRIVER	Dominic Greiner	QUALIFYING TIME	
TRACTION: LOW ☐ MEDIUM ☑ HIGH ☐		STARTING POSITION	3
TRACK TEMP		AIR TEMP 18	FINAL POSITION 11

SPUR

1ST			2ND		
☐ 58	☐ 59	☑ 60	☐ 53	☐ 54	☑ 55

PINION

1ST			2ND		
☐ 16	☑ 17	☐ 18	☐ 21	☑ 22	☐ 23

DRIVE TRAIN

FRONT	REAR
☐ GEAR DIFF cst	☑ GEAR DIFF 150.000 cst
☐ ONE WAY	☐ SOLID
☑ SPOOL	

SHOCK ABSORBERS

FRONT	REAR
OIL 700 cst	OIL 900 cst
SPRINGS blue	SPRINGS pink

○ Open
● Closed

ANTI-ROLL BARS

FRONT				REAR				
☐	☐	☑	☐	☐	☐	☐	☑	☐
1.8	2.2	2.5	2.8	1.6	1.8	2.0	2.2	2.5

TYRES

FRONT RIGHT	FRONT LEFT	Controlled Tyre ☑	REAR RIGHT	REAR LEFT
	Matrix	MAKE		
37	37	SHORE	40	40
62	62	DIAMETER	64	64
		5-MIN WEAR		

ENGINE

ENGINE	Max Power		
VERSION		HEADSHIMS	mm
GLOWPLUG		CARB DIA	mm
PIPE		MANIFOLD	
FUEL		NITRO	16 %

CENTAX

CLUTCHBELL	ALU ☑	STEEL ☐	
CLUTCHSHOE	YELLOW ☑	RED ☐	BLACK ☐
CLUTCH SPRING	1,8	CLUTCH BELL GAP	0,5 mm

AERODYNAMIC CONFIGURATION

BODY

BRAND SRC TYPE Spark

BODY POSITION

so much in front as possit mm

BUMPER HOLES CUT

☐ YES ☑ NO

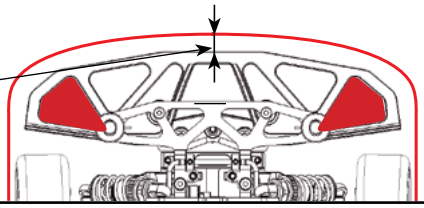

REMARKS

hard wishbones front and rear
chassi stiffener
new front solid axle

Editable by Arn0

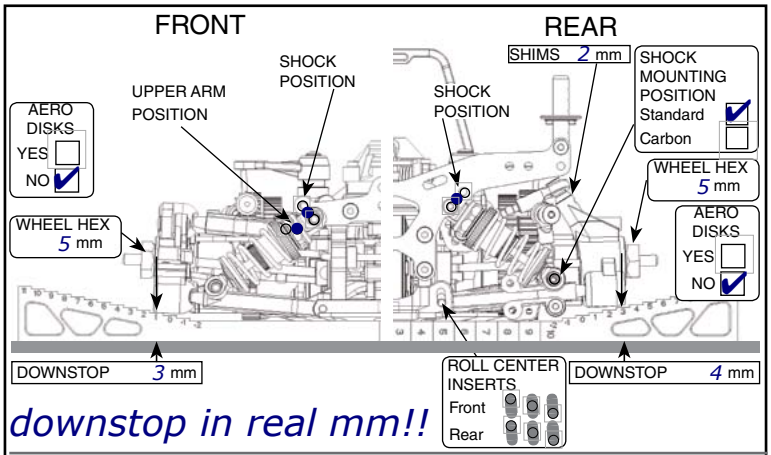
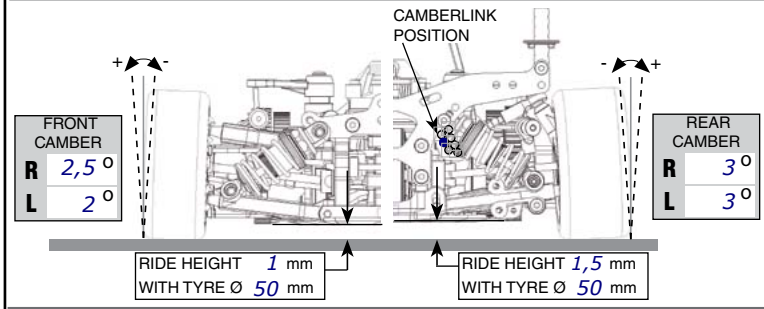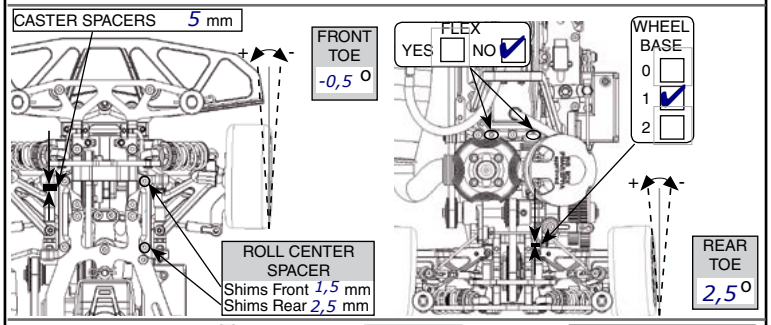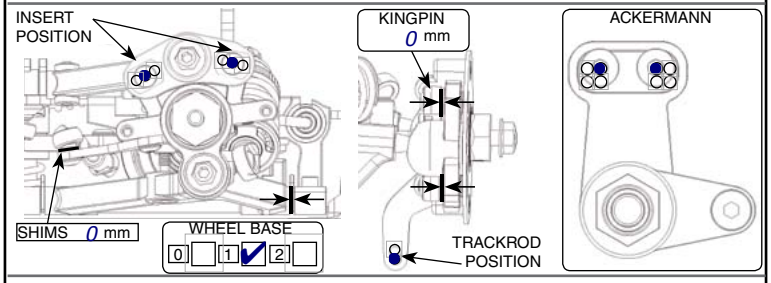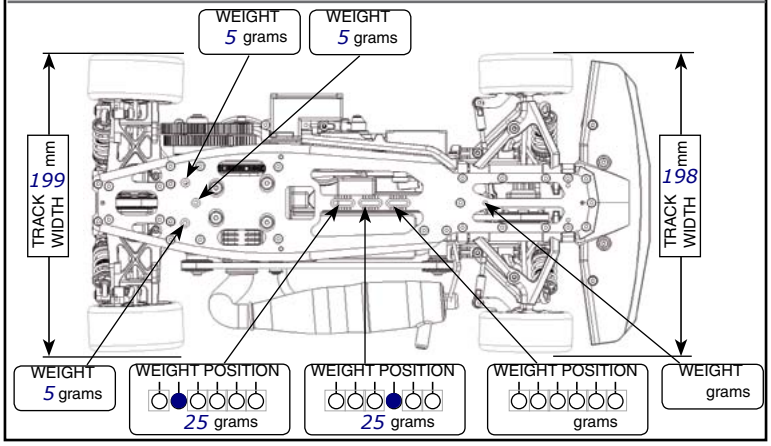
downstop in real mm!!