SET UP

Serpent 977 EVO VIPER

RACE	warm-up Nitro-West	DATE	03.04.2016
TRACK	MRC Dormagen	QUALIFYING POSITION	
DRIVER	Michael Salven	QUALIFYING TIME	
TRACTION: LOW ☐ MEDIUM ☑ HIGH ☐		STARTING POSITION	
TRACK TEMP 15	AIR TEMP 15	FINAL POSITION	

SPUR

1ST			2ND		
☐ 61	☑ 62	☐ 63	☐ 56	☑ 57	☐ 58

PINION

1ST			2ND		
☑ 18	☐ 19	☐ 20	☑ 23	☐ 24	☐ 25

SHOCK ABSORBERS

FRONT		REAR	
OIL	700 cst	OIL	700 cst
SPRINGS	purple	SPRINGS	red

○ Open
● Closed

TYRES

FRONT RIGHT	FRONT LEFT	Controlled Tyre ☐	REAR RIGHT	REAR LEFT
Matrix	Matrix	MAKE	Matrix	Matrix
32	32	SHORE	35	35
		DIAMETER		
		5-MIN WEAR		

ANTI-ROLL BARS

FRONT			REAR		
☐	☑	☐	☐	☑	☐
SOFT	MEDIUM	HARD	SOFT	MEDIUM	HARD

ENGINE

ENGINE	Picco			
VERSION	Otto	HEADSHIMS	0.4	mm
GLOWPLUG		CARB DIA		mm
PIPE	2120	MANIFOLD	standard	
FUEL	Runner Time	NITRO	16	%

CENTAX

CLUTCHBELL	ALU ☐	ALU COATED ☑	STEEL ☐
CLUTCHSHOE	YELLOW ☑	RED ☐	BLACK ☐
CLUTCH SPRING	x-hard 903647	CLUTCH BELL GAP	0.6 mm

AERODYNAMIC CONFIGURATION

BODY

BRAND Matrix TYPE R18

BODY POSITION 20 mm

AIR TRIM POSITION 8 mm

BUMPER INSERTS ☑ YES ☐ NO

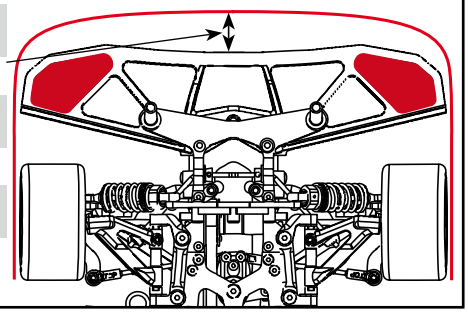

REMARKS
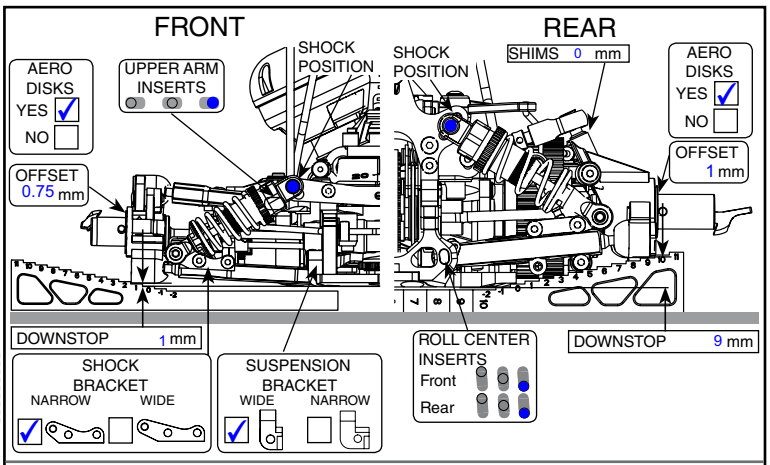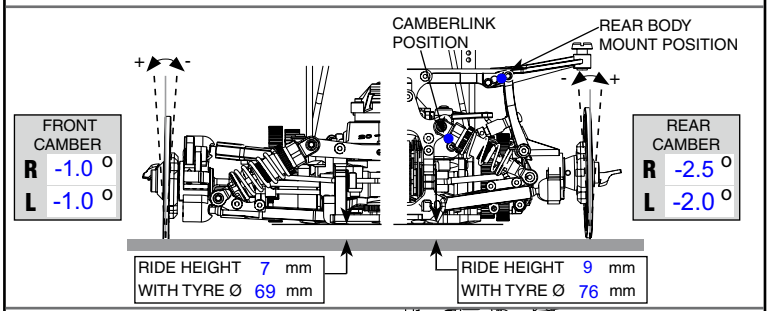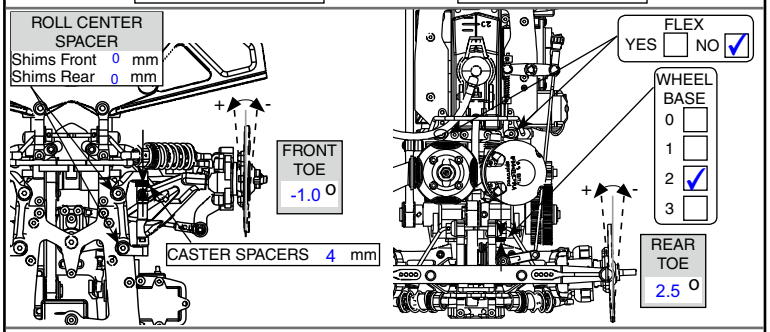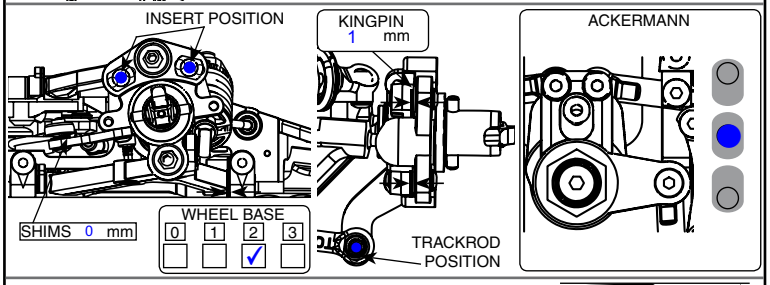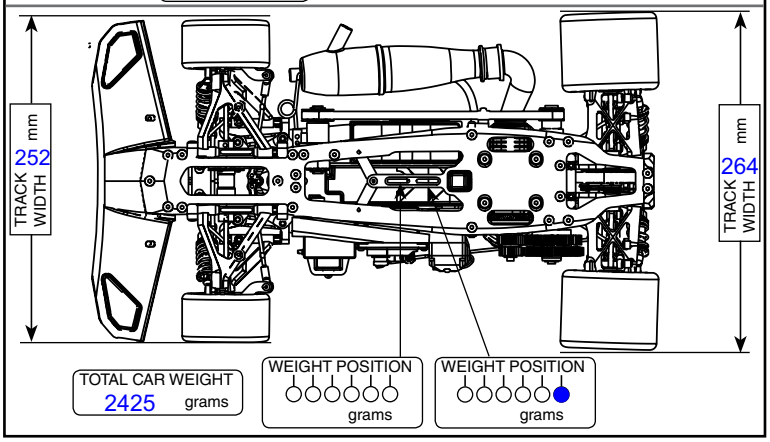
stiffener set 903653
Alu servosaver bottom 903589