SETUP SHEET COBRA SRX8

Serpent

DRIVER, TRACK AND RESULTS

DRIVER Barry Baker COUNTRY USA

WEATHER AIR TEMP 70F TRACK TEMP 70F ☐ DRY ☑ INTERMEDIATE ☐ WET

RACE 2017 Dirt Nitro Challange DATE 22-26 feb QUALY POS. 7 STARTING POS. 7 FINAL POS. 4 FASTEST LAP 41.9

TRACK Fear Farm **TYPE** ☐ TIGHT ☑ MEDIUM ☐ OPEN ☐ **GRIP** ☐ LOW ☑ MEDIUM ☐ HIGH ☐

SURFACE CONDITION ☐ SMOOTH ☑ ROUGH ☐

TYPE ☑ HARD PACKED ☐ CLAY ☐ MULTI/SURFACE ☐ GRASS ☐ BLUE GROOVE ☐ DIRT ☐ ASTRO-TURF ☐

SHOCK ABSORBERS

FRONT		REAR
400 cst	OIL	325 cst
V3 Pink	SPRINGS	V3 Blue
0 mm	REBOUND	0 mm
N° HOLES 5 Ø 1.4 mm	PISTONS	N° HOLES 5 Ø 1.4 mm
☐ BLADDER ☑ EMULSION	SEAL TYPE	☐ BLADDER ☑ EMULSION

ANTI-ROLL BARS

FRONT 1.8	2.0	2.3	2.5	2.7	REAR 1.8	2.0	2.3	2.5	2.7
☐	☐	☐	☑	☐	☐	☐	☐	☑	☐

DIFFERENTIAL OIL

FRONT DIFF	CENTER DIFF	REAR DIFF
5000 cst	5000 cst	3000 cst

GEARING

CLUTCH BELL 13 Teeth SPUR GEAR 46 Teeth

CLUTCH

CLUTCH BELL ☑ STANDARD ☐ VENTED

FLYWHEEL ☑ STEEL ☐ ALU

CLUTCH SHOES				CLUTCH SPRINGS	
SHOE TYPE	Carbon	x 2	with	SPRINGS TYPE	mm
SHOE TYPE	Alu	x 2	with	SPRINGS TYPE	mm

ENGINE, PIPE AND FUEL

ENGINE BRAND Picco TYPE 5TB

HEADSHIMS mm GLOWPLUG CARB Ø mm

EXHAUST PIPE Picco 2133 MANIFOLD

FUEL BRAND VP Power Master NITRO 30 %

FLEX CONFIGURATION

ENGINE MOUNT ☑ STANDARD ☐ MONOBLOCK

AERODYNAMIC CONFIGURATION

BODY ☐ STANDARD ☑ HIGH DOWNFORCE ☐ OTHER

WING

TYPE Swerpent 600825 WING PLATES ☐ 2° ☑ 4° ☐ 6°

GURNEY STRIP ☐ YES ☑ NO CENTER FOIL ☐ YES ☐ NO

TIRES

Controlled Tire ☐

FRONT		REAR
AKA	MAKE	AKA
Double down SSLW	TYPE	Double down SSLW
Red	INSERTS	Red
AKA	WHEELS	AKA

FRONT | REAR

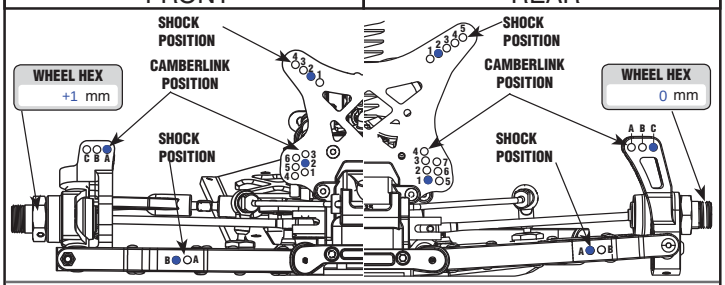

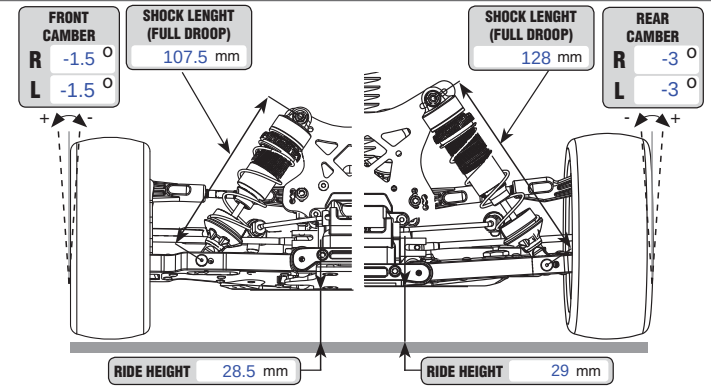

FRONT ARM SKIN: ☑ TOP ☑ NYLON ☐ CARBON; ☑ BOTTOM ☑ NYLON ☐ CARBON

REAR ARM SKIN: ☐ TOP ☐ NYLON ☐ CARBON; ☐ BOTTOM ☐ NYLON ☐ CARBON

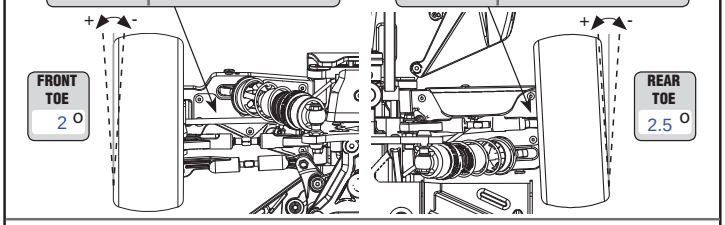

STEERING BLOCK ACKERMAN PLATE

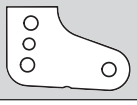

OPTION TYPE 1

REAR HUB ROLL CENTER INSERT

LOW (L-H) MED LOW (ML-MH)

MED HIGH (ML-MH) HIGH (H-H)

CASTER BLOCK ☐ 13° ☐ 15° ☑ 17°

FRONT BRACE ☑ STOCK ☐ ALU

REAR BRACE ☑ STOCK ☐ ALU

WHEEL BASE ☑ 0 ☐ 1.25 ☐ 2.5 ☐ 3.75 ☐ 5

STEERING STOP 0 mm

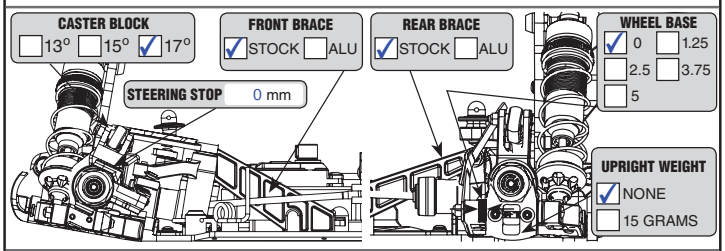

UPRIGHT WEIGHT ☑ NONE ☐ 15 GRAMS

SUSPENSION BRACKETS INSERTS

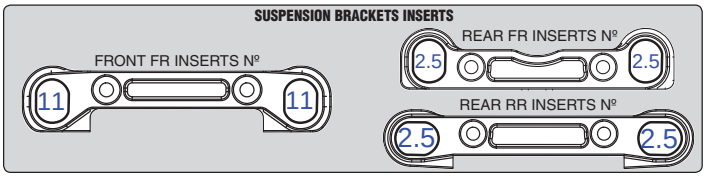

REMARKS

I will try 2-C for the rear camber link as well as 5X1.5 rear pistons with 325 or 350cst next time. I feel that this set up will be my standard to start with and tweak it alittle each time as it is the most neutral for me to drive.