SETUP SHEET X20 '23 medius

Serpent

DRIVER, TRACK AND RESULTS

DRIVER	Matthieu Dambrine	CIRCUIT	Norfork club
DATE		EVENT	
TRACK	ASPHALT ☐ CARPET ☑	PLACE	INDOOR ☐ OUTDOOR ☐
POSITION	Q / F	TRACTION	HIGH ☐ MEDIUM ☑ LOW ☐
SITUATION	BUMP ☑ FLAT ☐		

DRIVE TRAIN

FRONT	REAR
☐ GEAR DIFF cst	☑ GEAR DIFF 8000 cst
☑ SPOOL	

SHOCK ABSORBERS

FRONT		REAR
450	OIL	450
2.5-2.8	SPRINGS	2.7
9.5mm	SHOCK LENGTH	10mm
kit	PISTON	kit

ANTI-ROLL BARS

FRONT		REAR
1.3mm	THICKNESS	1.3mm

TYRES

FRONT		REAR
Rush	BRAND	Rush
MR33	ADDITIVE	MR33
15mins	ADDITIVE TIMING	15mins

FLEX

CHASSIS	☐ CARBON ☑ ALU
TOPDECK	SPLIT ☐ SOFT ☐ HARD ☑ ONE PIECE

STEERING

STEERING ANGLE	27 degree
SERVO HORN LENGTH	20 mm

ELECTRONICS

ESC	Orca
MOTOR	Orca 5t
SERVO	
BATTERY	Orca

GEAR

SPUR GEAR	84
PINION GEAR	22
FINAL RATIO	7.6

BODY

TYPE	Twister
WING	Twister
POSITION	FORWARD / Rear

REMARKS
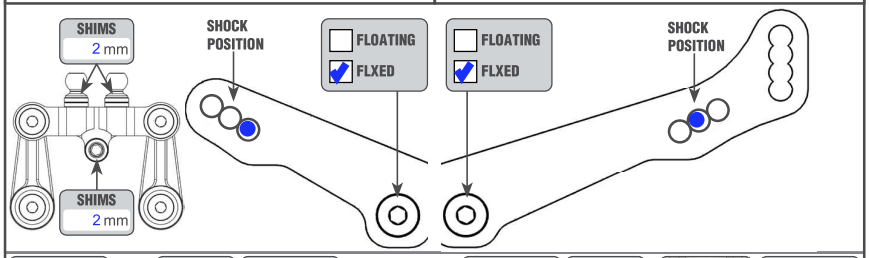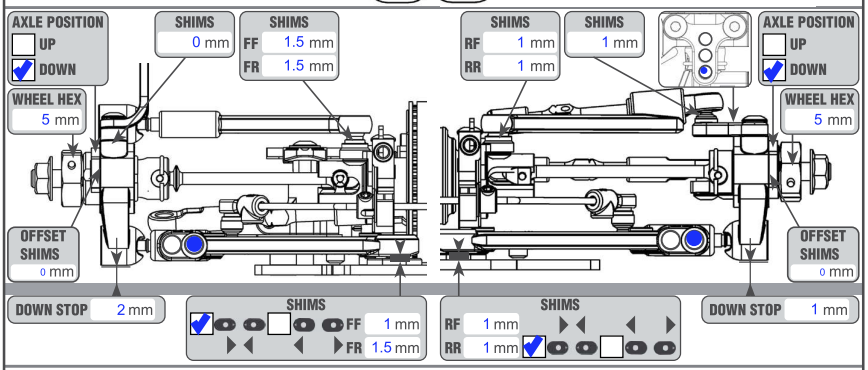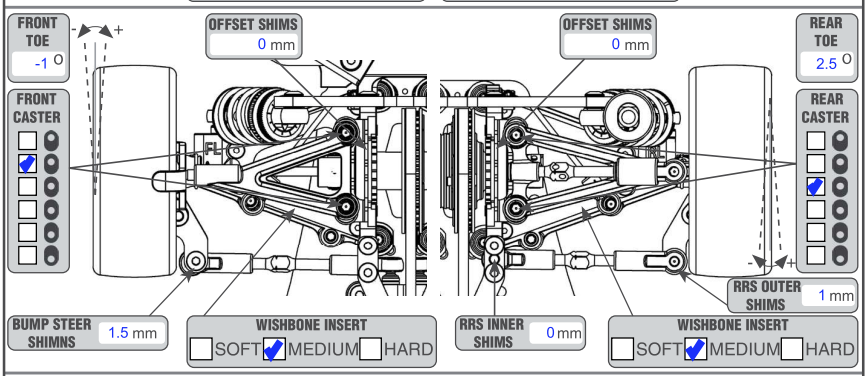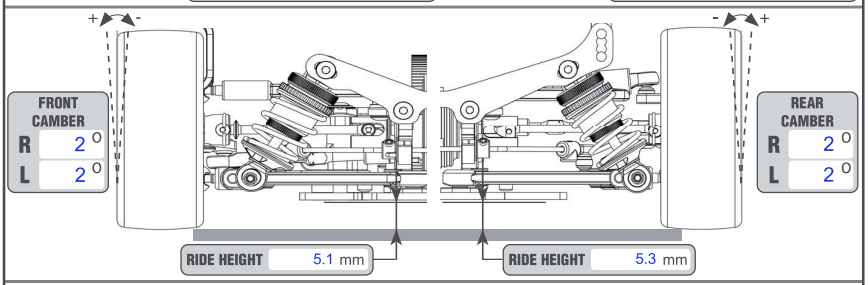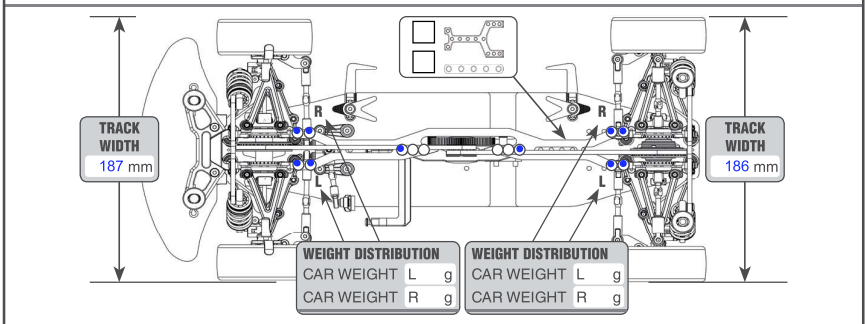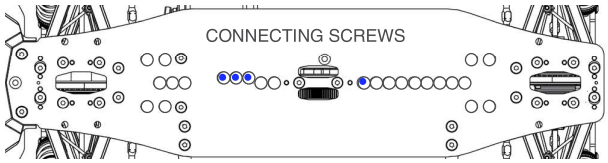
FRONT | REAR